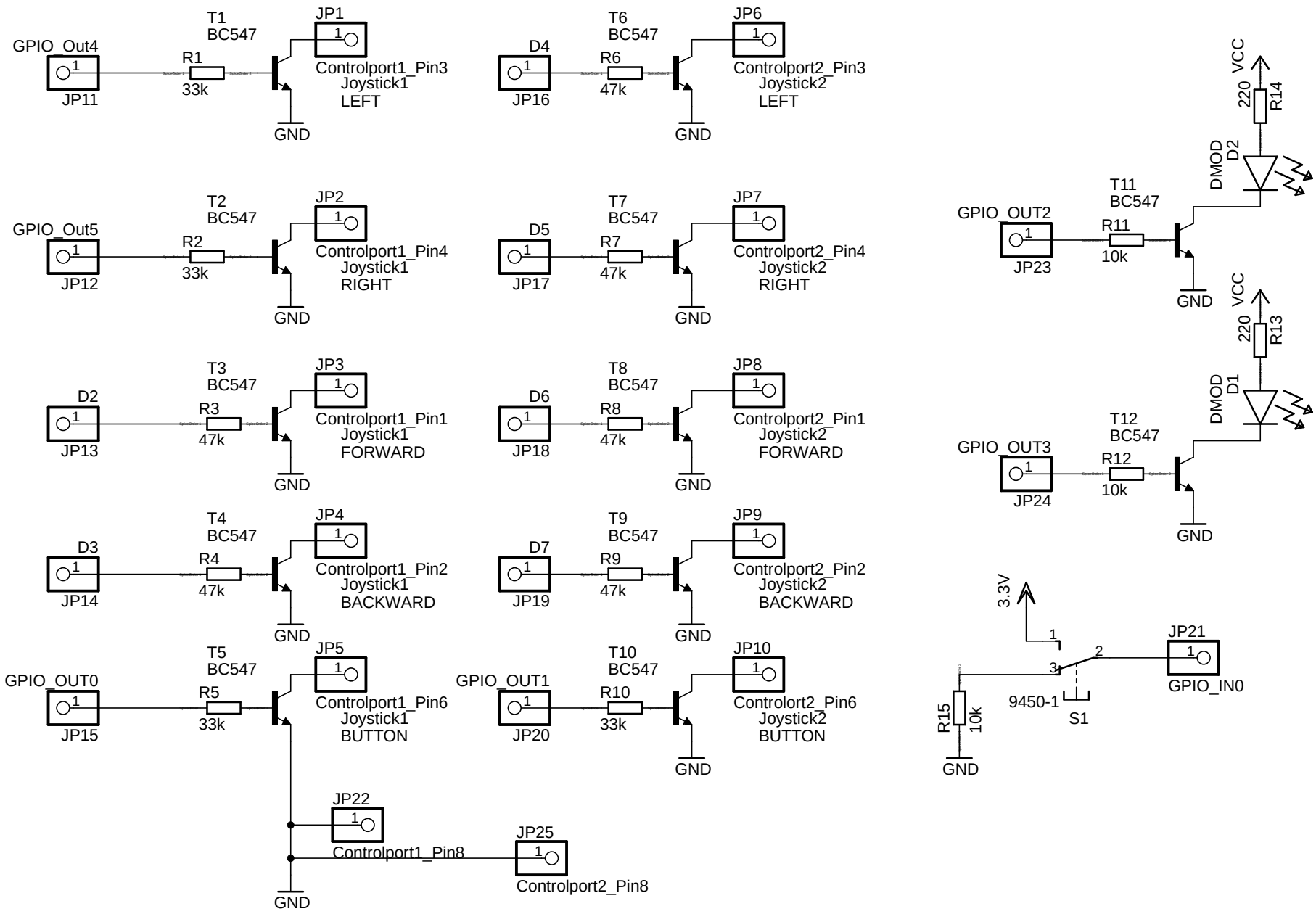

25.12.2019 19:36 f=1.20 C:\Users\Britta\Documents\Arduino\C64_Joystick\C64_Joystick.sch (Sheet: 1/1)