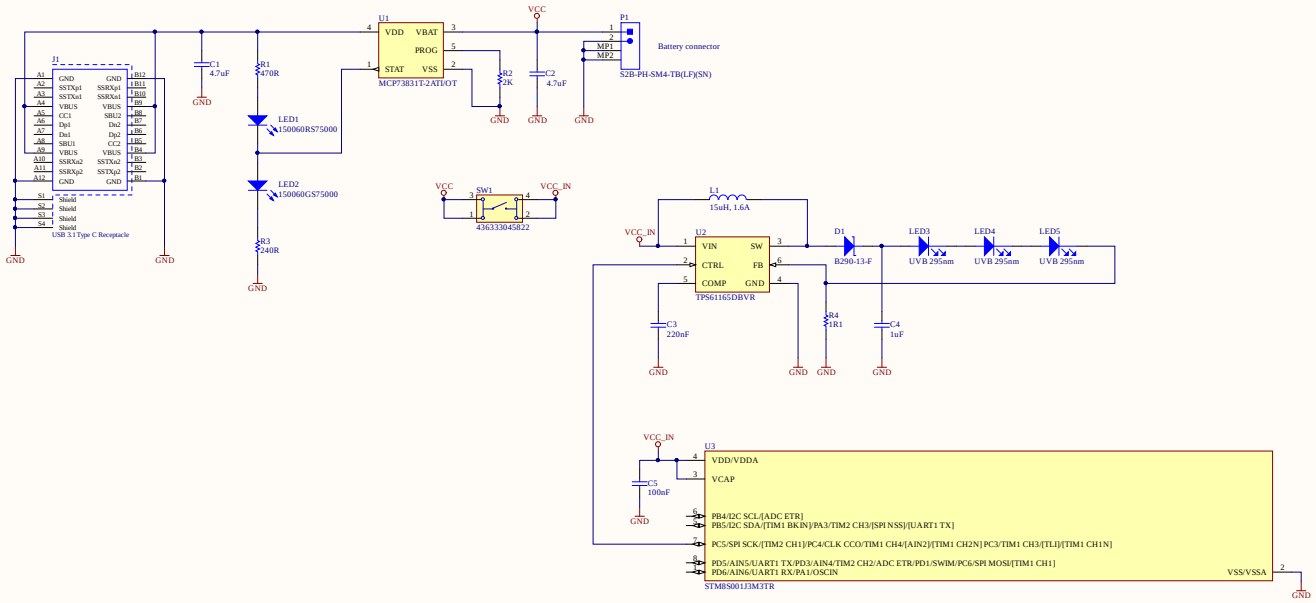
J1
USB 3.1 Type C Receptacle
C1
4.7uF
R1
470R
LED1
150060RS75000
LED2
150060GS75000
R3
240R
U1
VDD
VBAT
PROG
STAT
VSS
MCP73831T-2ATI/OT
R2
2K
C2
4.7uF
VCC
P1
MP1
MP2
Battery connector
S2B-PH-SM4-TB(LF)(SN)
SW1
436333045822
VCC_IN
L1
15uH, 1.6A
U2
VIN
SW
CTRL
FB
COMP
GND
TPS61165DBVR
D1
B290-13-F
LED3
UVB 295nm
LED4
UVB 295nm
LED5
UVB 295nm
C3
220nF
R4
1R1
C4
1uF
C5
100nF
U3
VDD/VDDA
VCAP
PB4/I2C SCL/[ADC ETR]
PB5/I2C SDA/[TIM1 BKIN]/PA3/TIM2 CH3/[SPI NSS]/[UART1 TX]
PC5/SPI SCK/[TIM2 CH1]/PC4/CLK CCO/TIM1 CH4/[AIN2]/[TIM1 CH2N] PC3/TIM1 CH3/[TLI]/[TIM1 CH1N]
PD5/AIN5/UART1 TX/PD3/AIN4/TIM2 CH2/ADC ETR/PD1/SWIM/PC6/SPI MOSI/[TIM1 CH1]
PD6/AIN6/UART1 RX/PA1/OSCIN
VSS/VSSA
STM8S001J3M3TR
GND

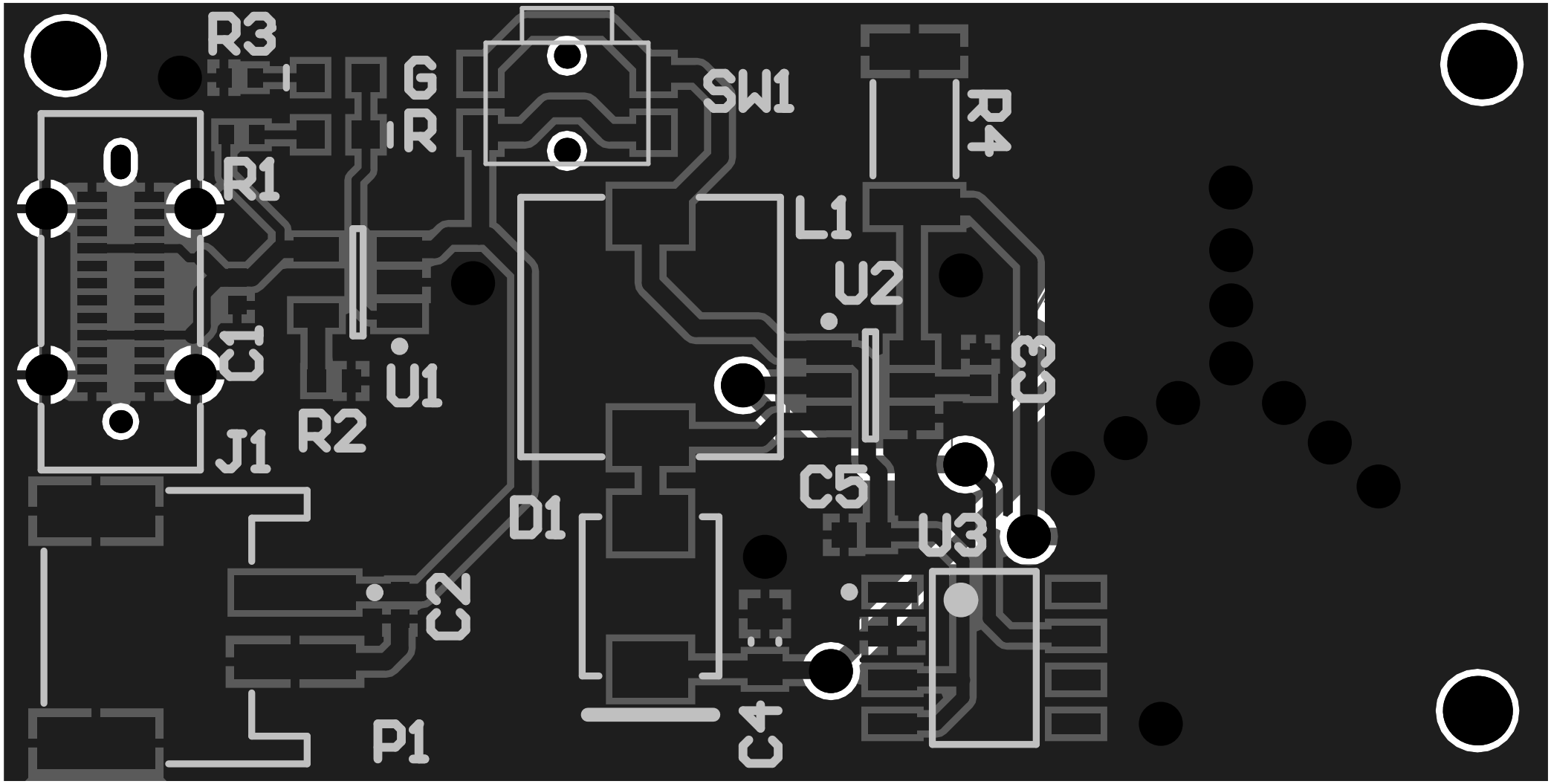
R3
G
R
SW1
R4
R1
L1
U2
C1
U1
C3
R2
J1
C5
D1
U3
C2
C4
P1