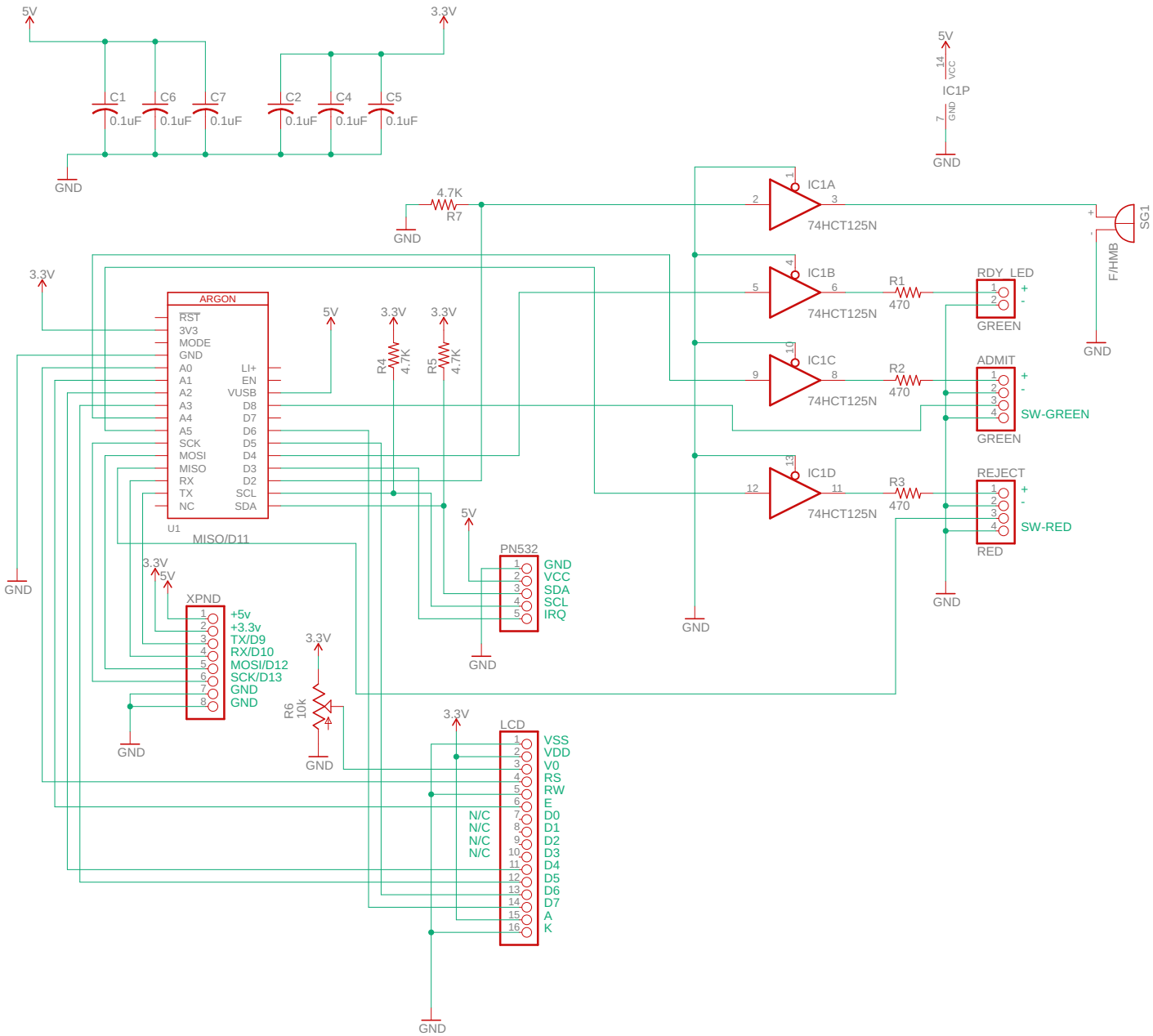
5V
3.3V
C1
C6
C7
C2
C4
C5
0.1uF
GND
4.7K
R7
IC1A
IC1B
IC1C
IC1D
74HCT125N
IC1P
VCC
GND
SG1
F/HMB
RDY_LED
GREEN
ADMIT
SW-GREEN
REJECT
SW-RED
RED
R1
R2
R3
470
ARGON
RST
3V3
MODE
GND
A0
A1
A2
A3
A4
A5
SCK
MOSI
MISO
RX
TX
NC
LI+
EN
VUSB
D8
D7
D6
D5
D4
D3
D2
SCL
SDA
U1
MISO/D11
R4
R5
4.7K
PN532
GND
VCC
SDA
SCL
IRQ
XPND
+5v
+3.3v
TX/D9
RX/D10
MOSI/D12
SCK/D13
GND
GND
R6
10k
LCD
VSS
VDD
V0
RS
RW
E
D0
D1
D2
D3
D4
D5
D6
D7
A
K
N/C
N/C
N/C
N/C