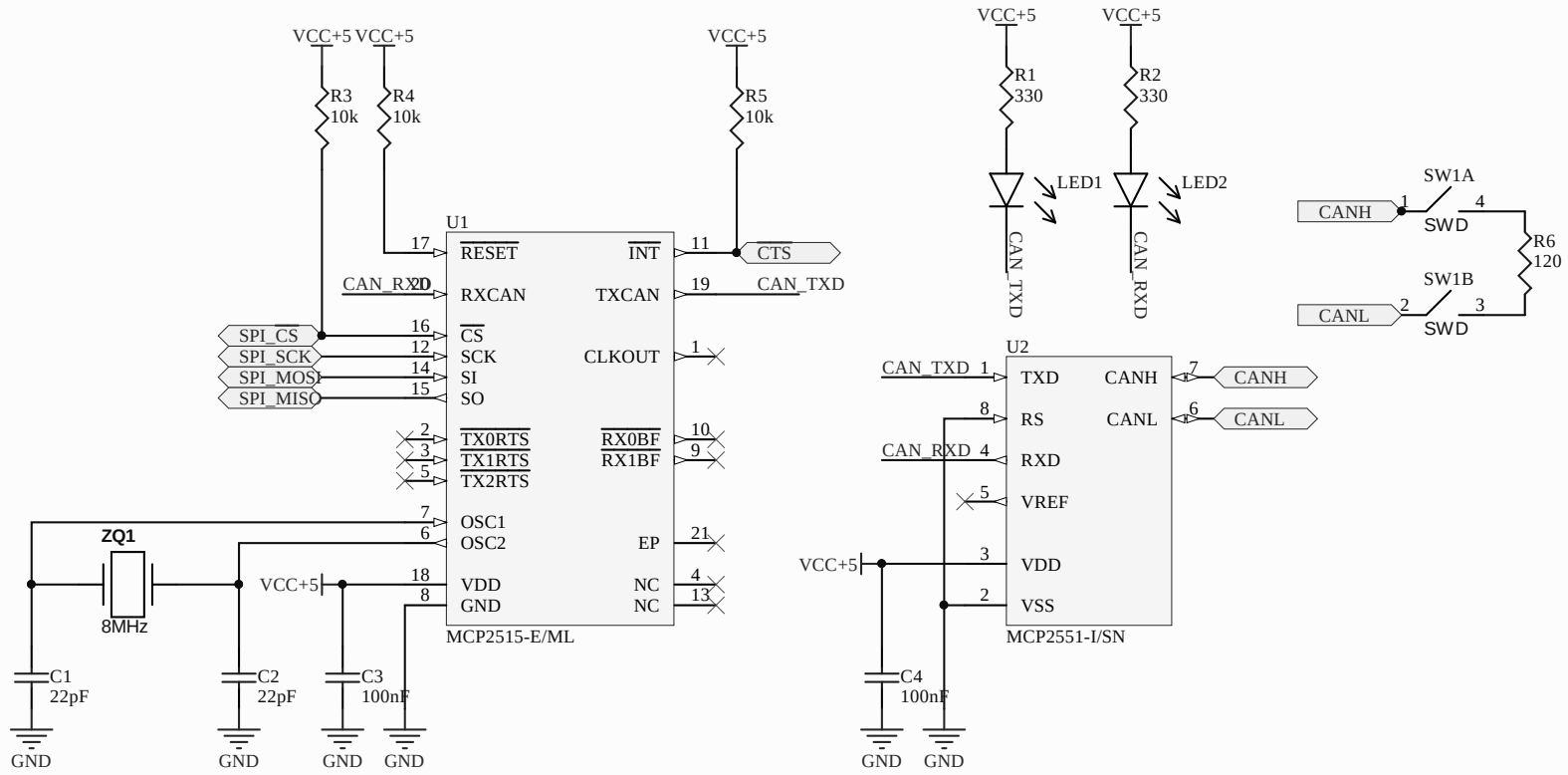
VCC+5
R3
10k
R4
10k
R5
10k
U1
RESET
RXCAN
CS
SCK
SI
SO
TX0RTS
TX1RTS
TX2RTS
OSC1
OSC2
VDD
GND
INT
TXCAN
CLKOUT
RX0BF
RX1BF
EP
NC
NC
CTS
CAN_RXD
CAN_TXD
SPI_CS
SPI_SCK
SPI_MOSI
SPI_MISO
ZQ1
8MHz
C1
22pF
C2
22pF
C3
100nF
GND
R1
330
R2
330
LED1
LED2
U2
TXD
RS
RXD
VREF
VDD
VSS
CANH
CANL
MCP2515-E/ML
MCP2551-I/SN
C4
100nF
SW1A
SW1B
SWD
R6
120