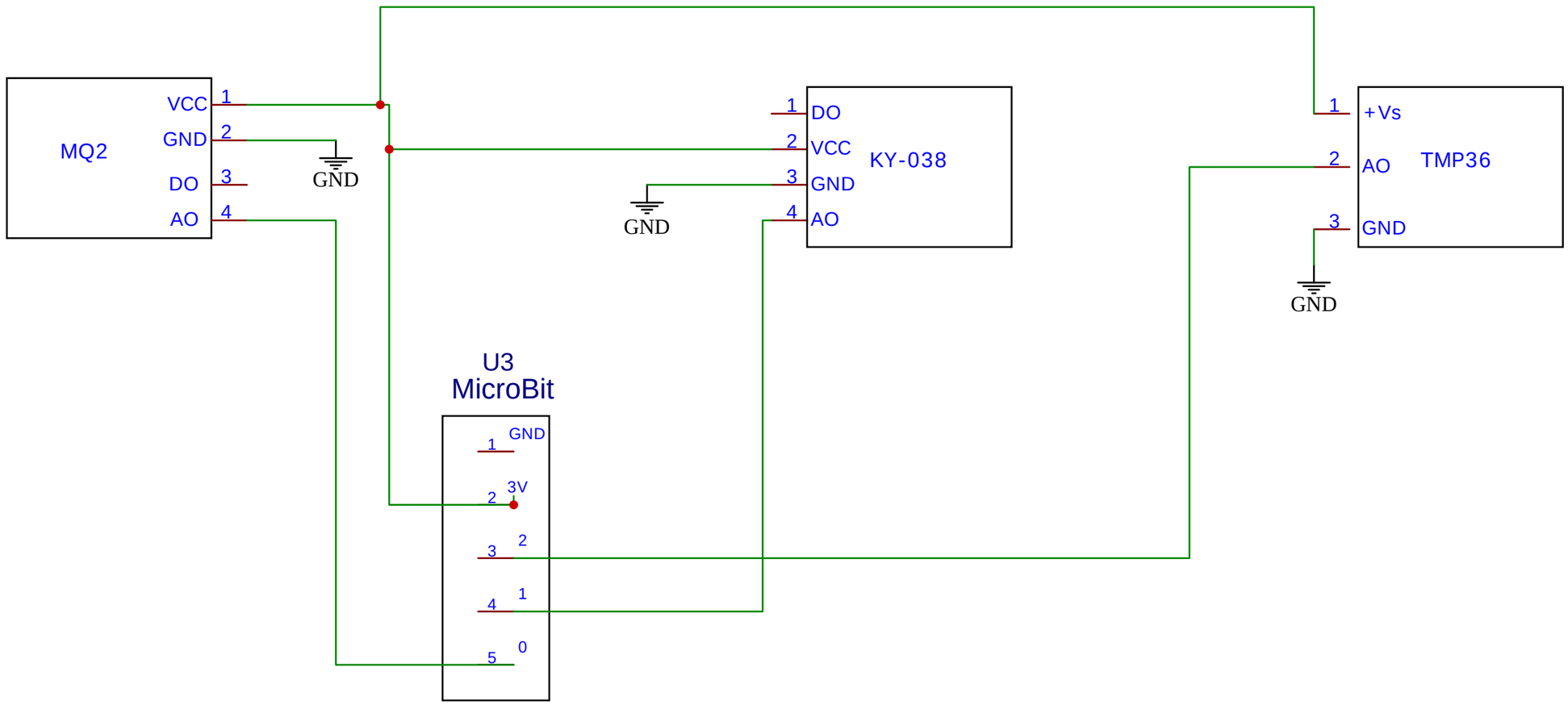

TITLE: Microbit	REV: 1.0
Date: 2021	Sheet: 2/2
EasyEDA V5.3.14	Drawn By: Coders Cafe