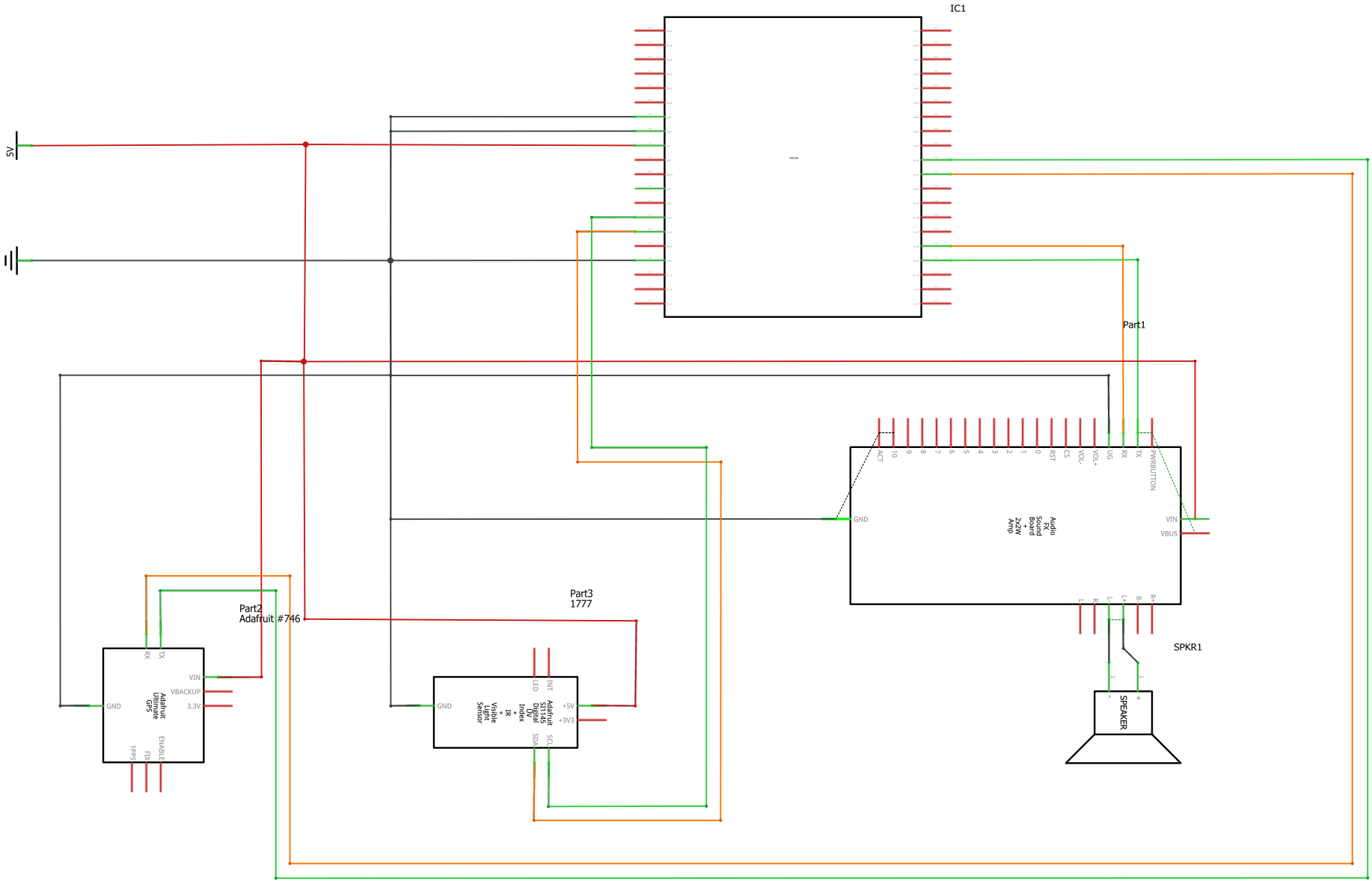
IC1
5V
Part1
ACT
T0
9
8
7
6
5
4
3
2
1
0
RST
CS
VOL-
VOL+
RX
TX
PWRBUTTON
GND
Audio
FX
Sound
Board
+
2x2W
Amp
VIN
VBUS
L
R
L-
L+
R-
R+
SPKR1
SPEAKER
Part2
Adafruit #746
RX
TX
VIN
VBACKUP
3.3V
GND
Adafruit
Ultimate
GPS
1PPS
FIX
ENABLE
Part3
1777
LED
INT
GND
Adafruit
SI1145
Digital
UV
Index
+
IR
+
Visible
Light
Sensor
+5V
+3V3
SDA
SCL