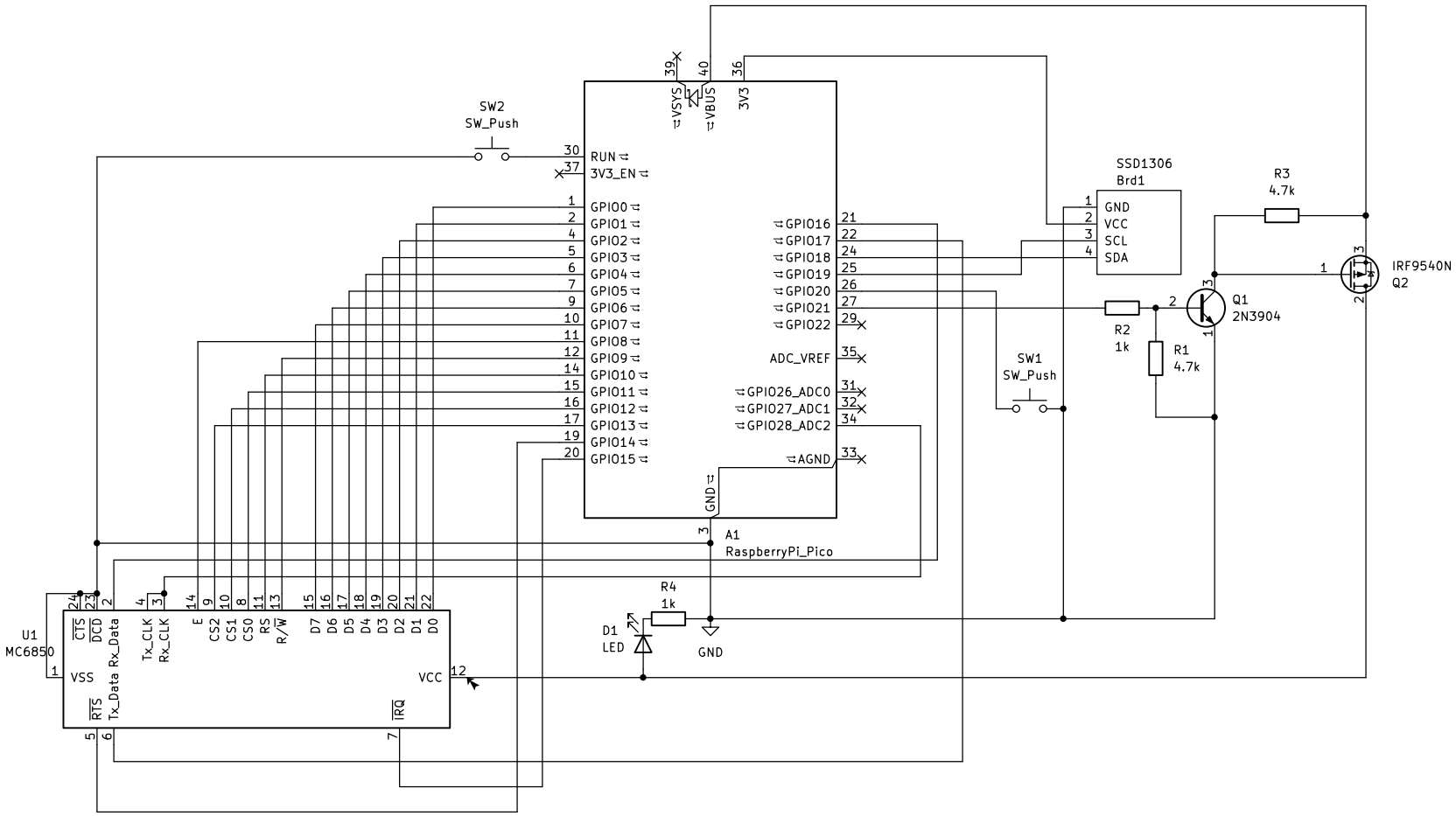

DQsoft

Sheet: /

File: PCB_6850.kicad_sch

Title: MC6850 Tester

Size: A4	Date: 2026-05-07	**Rev: 1.0**
KiCad E.D.A. 10.0.1		Id: 1/1