USB-C CONNECTOR

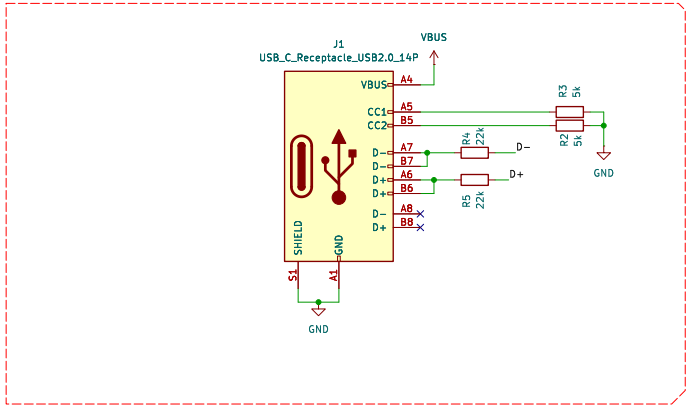

Mounting Hole

POWER_SUPPLY

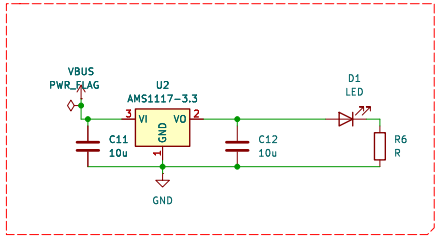

STM32F401

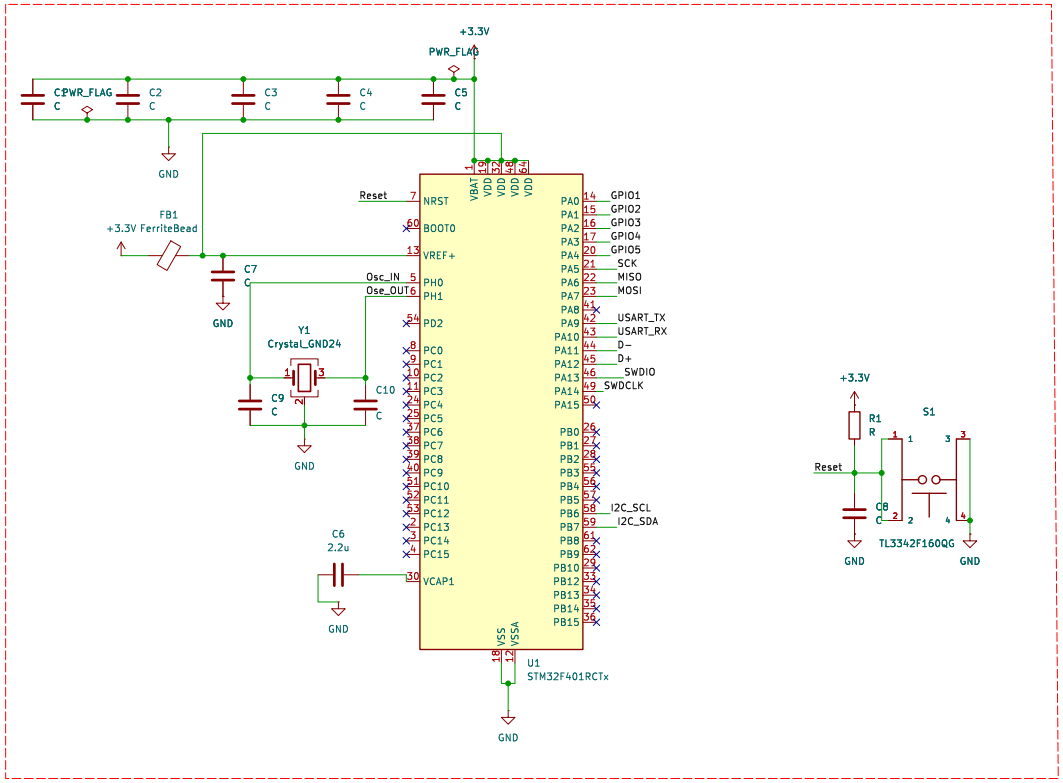

HEADER_PINS

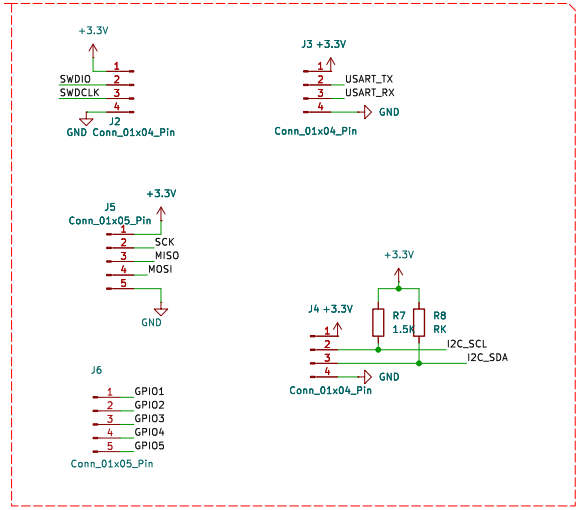

DONE BY,
SHRIMAN RAJ T

Sheet: /
File: STM32F401_Breakout Board.kicad_sch

Title:

Size: A3	Date:	Rev:
KiCad E.D.A. 9.0.7		Id: 1/1