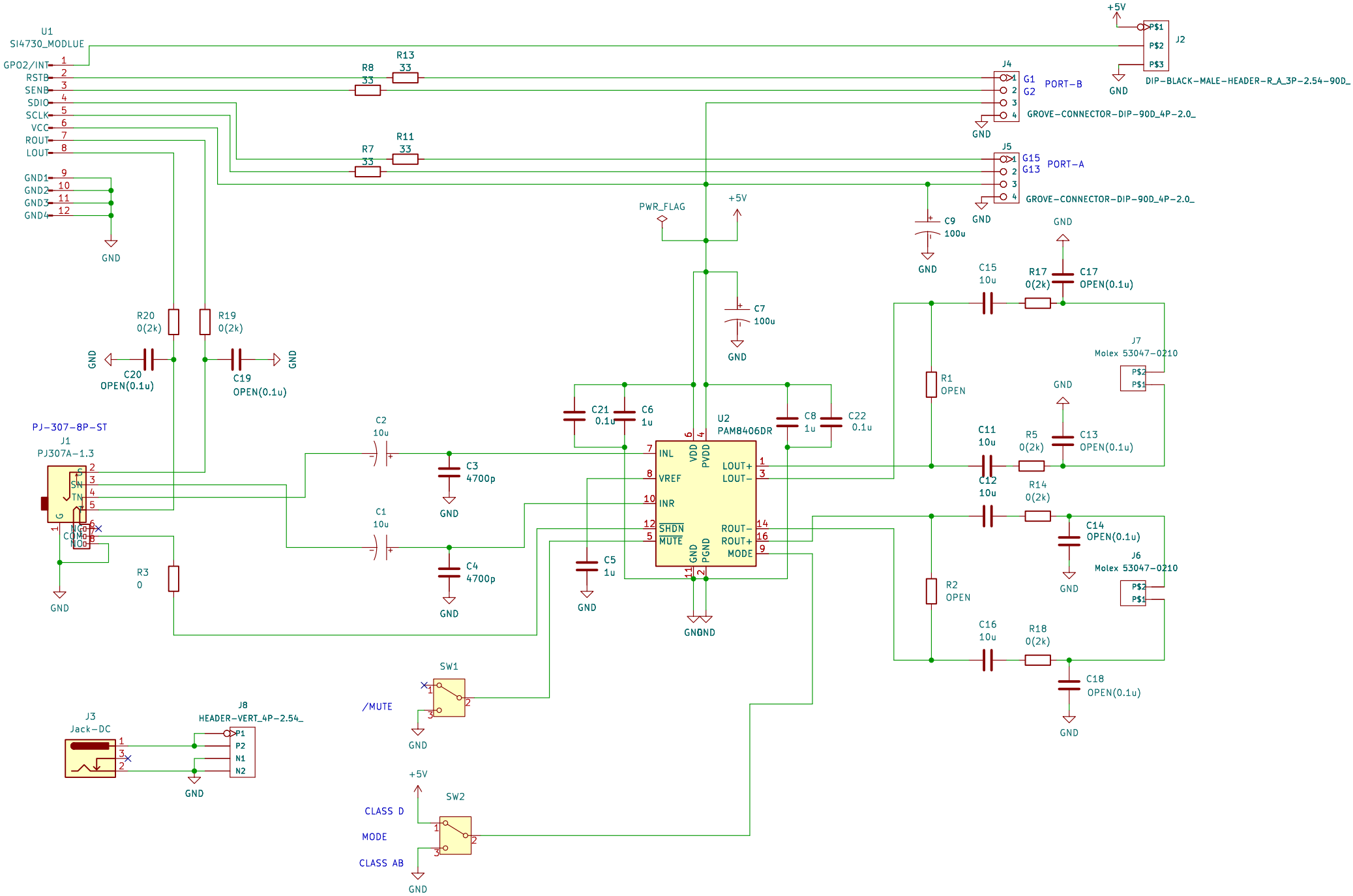
U1
SI4730_MODLUE
GPO2/INT
RSTB
SENB
SDIO
SCLK
VCC
ROUT
LOUT
GND1
GND2
GND3
GND4
GND
R8
33
R13
33
R7
33
R11
33
J4
G1
G2
PORT-B
GROVE-CONNECTOR-DIP-90D_4P-2.0_
J5
G15
G13
PORT-A
GROVE-CONNECTOR-DIP-90D_4P-2.0_
+5V
J2
P$1
P$2
P$3
DIP-BLACK-MALE-HEADER-R_A_3P-2.54-90D_
PWR_FLAG
C9
100u
C7
100u
R20
0(2k)
R19
0(2k)
C20
OPEN(0.1u)
C19
OPEN(0.1u)
PJ-307-8P-ST
J1
PJ307A-1.3
R3
0
C2
10u
C1
10u
C3
4700p
C4
4700p
C21
0.1u
C6
1u
C5
1u
U2
PAM8406DR
INL
VREF
INR
SHDN
MUTE
VDD
PVDD
GND
PGND
LOUT+
LOUT-
ROUT-
ROUT+
MODE
C8
1u
C22
0.1u
GNDND
C15
10u
R17
0(2k)
C17
OPEN(0.1u)
R1
OPEN
C11
10u
R5
0(2k)
C13
OPEN(0.1u)
C12
10u
R14
0(2k)
C14
OPEN(0.1u)
R2
OPEN
C16
10u
R18
0(2k)
C18
OPEN(0.1u)
J7
Molex 53047-0210
J6
Molex 53047-0210
SW1
/MUTE
J3
Jack-DC
J8
HEADER-VERT_4P-2.54_
P1
P2
N1
N2
SW2
CLASS D
MODE
CLASS AB