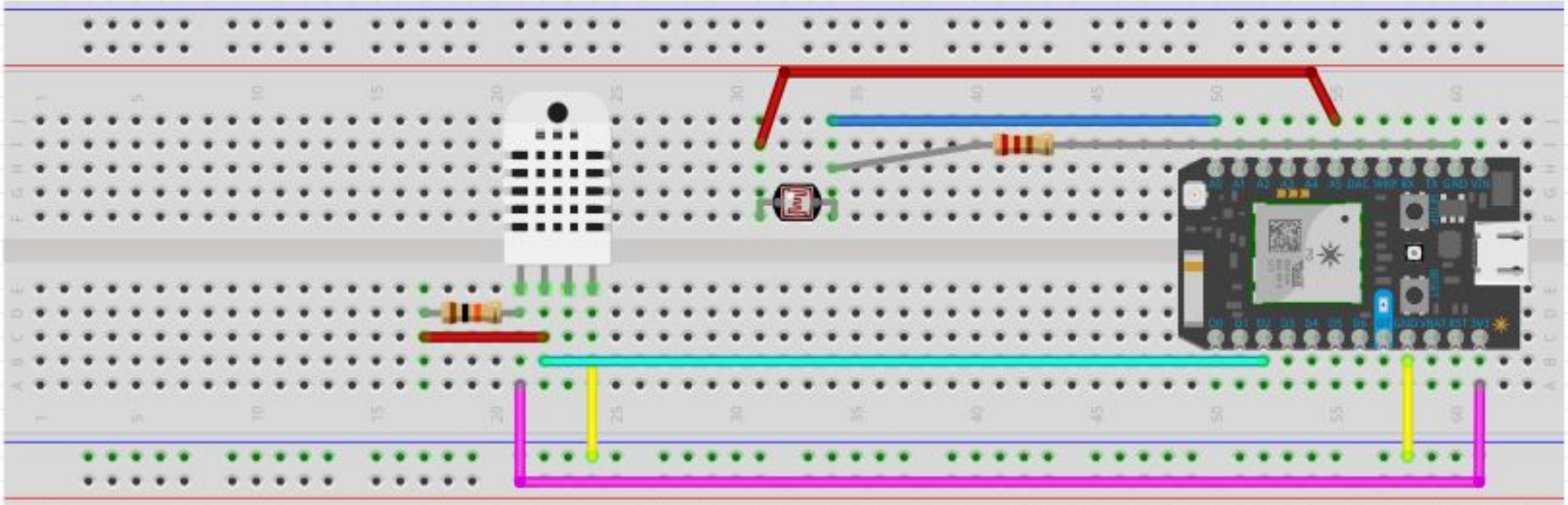

fritzing