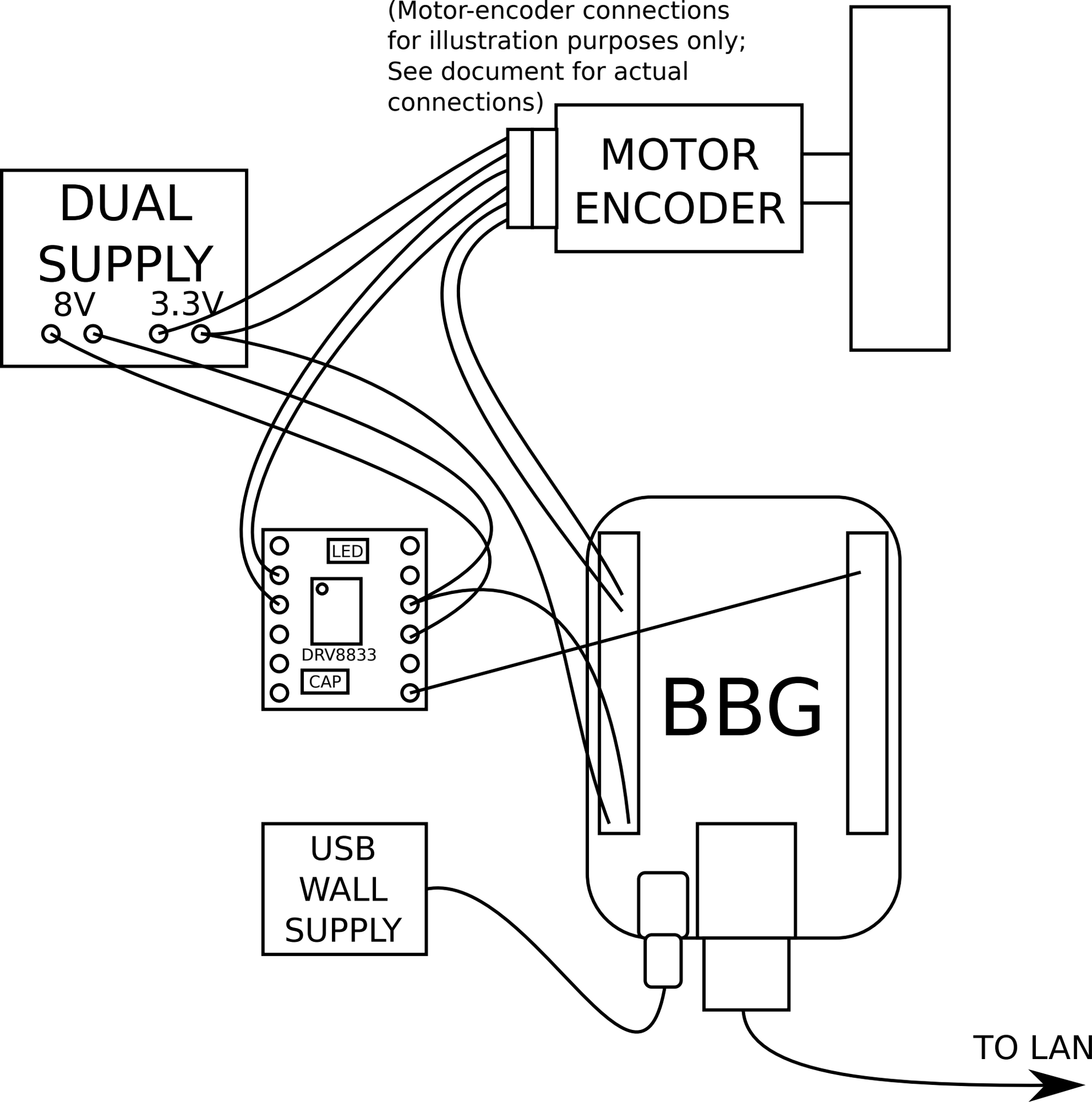
(Motor-encoder connections
for illustration purposes only;
See document for actual
connections)
MOTOR
ENCODER
DUAL
SUPPLY
8V
3.3V
LED
DRV8833
CAP
BBG
USB
WALL
SUPPLY
TO LAN