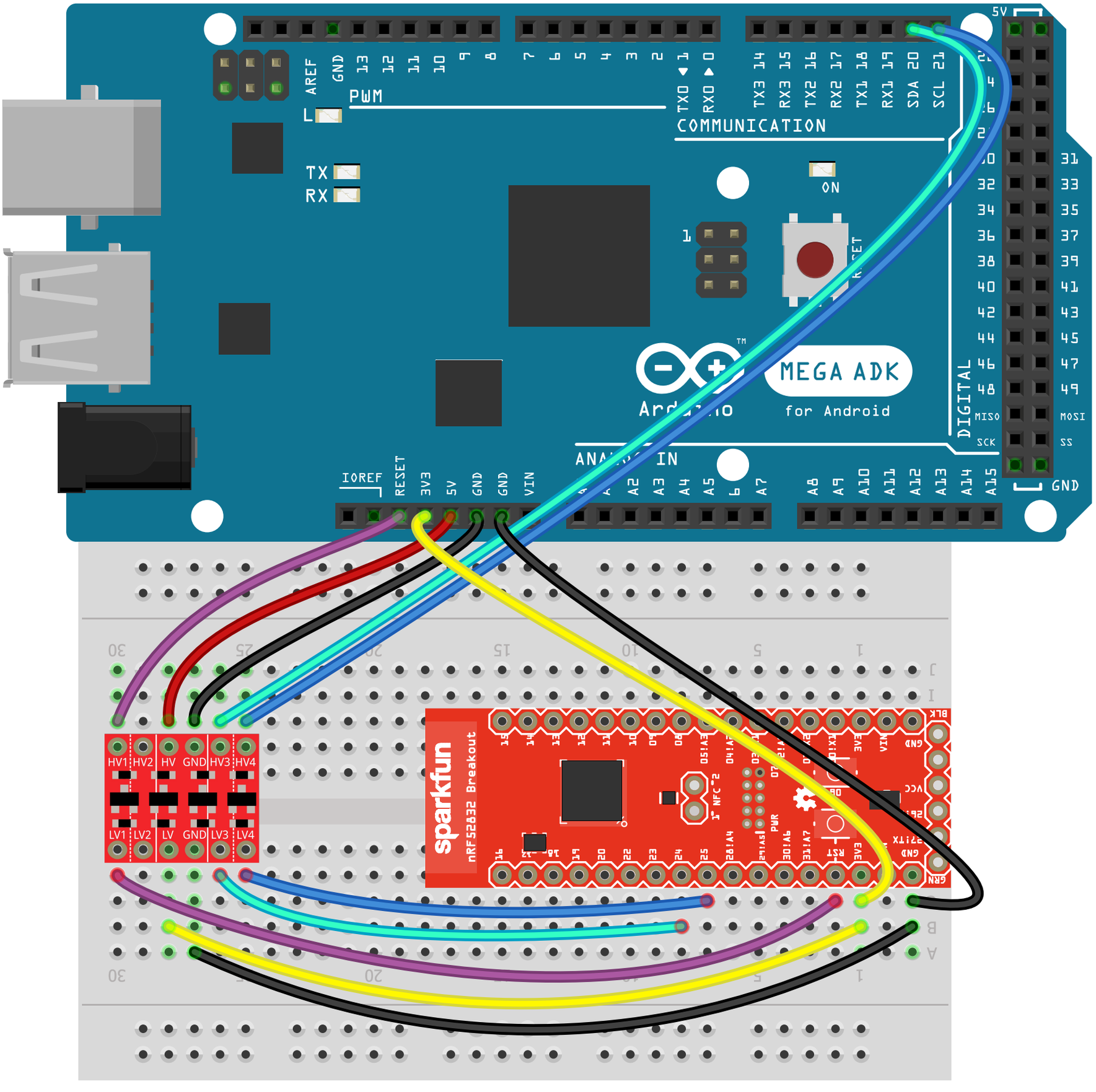
MEGA ADK
for Android
PWM
COMMUNICATION
DIGITAL
ANALOG IN
IOREF
RESET
3V3
5V
GND
VIN
AREF
TX
RX
ON
HV1 HV2 HV GND HV3 HV4
LV1 LV2 LV GND LV3 LV4
sparkfun
nRF52832 Breakout

fritzing