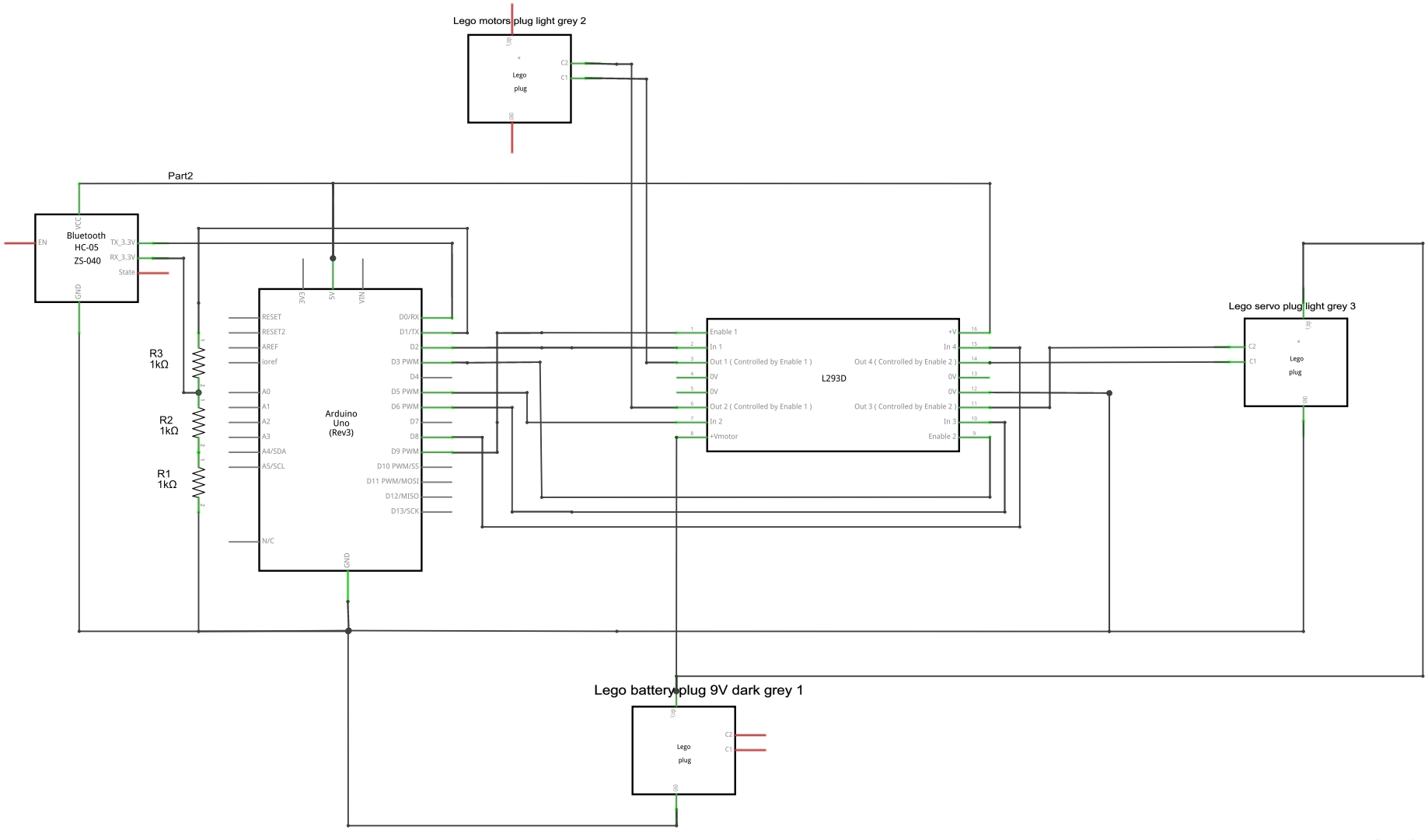
Lego motors plug light grey 2
Lego
plug
Part2
Bluetooth
HC-05
ZS-040
EN
VCC
TX_3.3V
RX_3.3V
State
GND
R3
1kΩ
R2
1kΩ
R1
1kΩ
Arduino
Uno
(Rev3)
3V3
5V
VIN
RESET
RESET2
AREF
Ioref
A0
A1
A2
A3
A4/SDA
A5/SCL
N/C
D0/RX
D1/TX
D2
D3 PWM
D4
D5 PWM
D6 PWM
D7
D8
D9 PWM
D10 PWM/SS
D11 PWM/MOSI
D12/MISO
D13/SCK
GND
L293D
Enable 1
In 1
Out 1 (Controlled by Enable 1)
0V
0V
Out 2 (Controlled by Enable 1)
In 2
+Vmotor
+V
In 4
Out 4 (Controlled by Enable 2)
0V
0V
Out 3 (Controlled by Enable 2)
In 3
Enable 2
Lego servo plug light grey 3
Lego
plug
Lego battery plug 9V dark grey 1
Lego
plug
fritzing