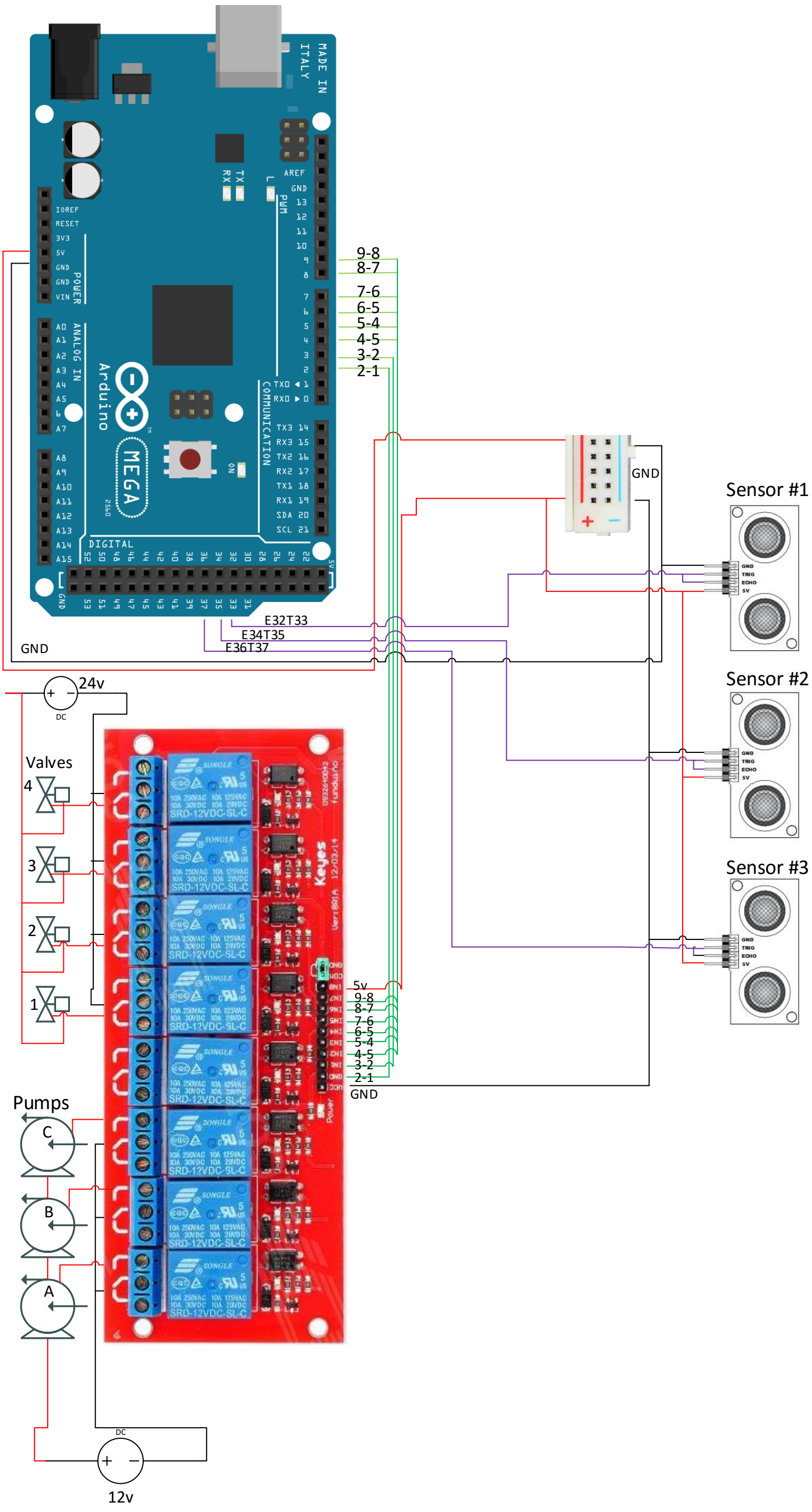
MADE IN ITALY
Arduino
MEGA
POWER
ANALOG IN
DIGITAL
COMMUNICATION
PWM
IOREF
RESET
3V3
5V
GND
VIN
AREF
TX
RX
L
ON
9-8
8-7
7-6
6-5
5-4
4-5
3-2
2-1
E32T33
E34T35
E36T37
GND
24v
DC
Valves
4
3
2
1
Pumps
C
B
A
SRD-12VDC-SL-C
Keyes
5v
12v
Sensor #1
Sensor #2
Sensor #3
GND
TRIG
ECHO
5V